File No. 272 SHEET 1/2 [2]

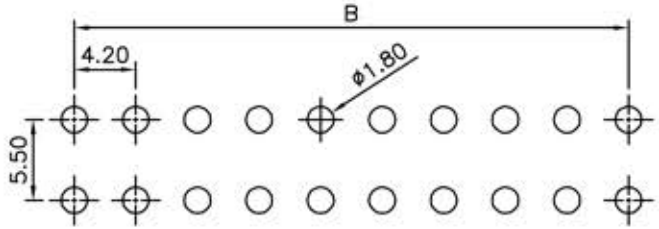

Recommended P.C.B. Layout(Top View) [1]

[1] SPECIFICATION
Current Rating:7.0 Amp Max.
Dielectric Withstand Voltage:
1000V AC RMS For 60 Seconds
Insulation Resistance:1000 Megaohms Min.
At 1000V DC
Operation Temperature:−25°C~+85°C
Housing:PA66(UL94V−2)
[2] Terminal:Brass,Tin Plated Over Nickel
RoHS Compliant

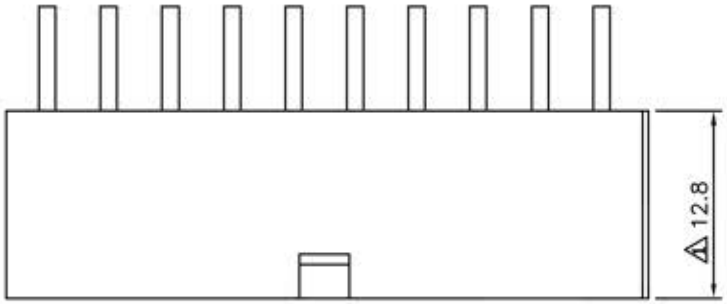

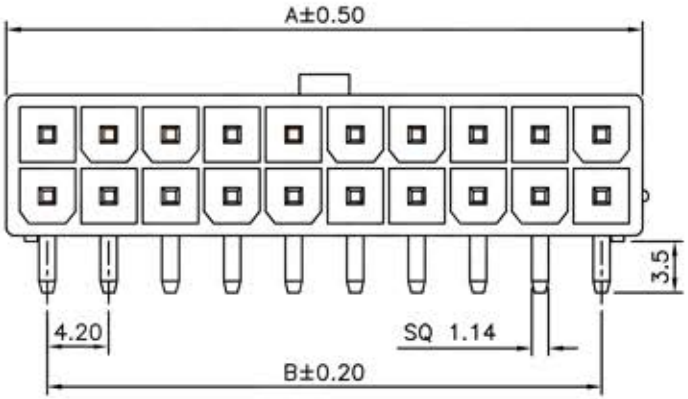

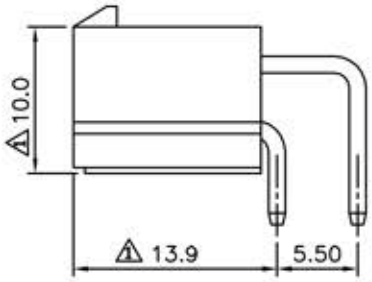

Pin	A	B
02	5.60	——
04	9.80	4.20
06	14.00	8.40
08	18.20	12.60
10	22.40	16.80
12	26.60	21.00
14	30.80	25.20
16	35.00	29.40
18	39.20	33.60
20	43.40	37.80
22	47.60	42.00
24	51.80	46.20

پارت هاب PART HUP
از بازار، آنلاین بخرید

APPROVED BY	MEI
CHECKED BY	HZF
DRAWING BY	SONG
SCALE	NONE
REV.	A2

UNLESS OTHERWISE SPECIFIED TOLERANCES ARE
[1] .X ±0.30
.XX ±0.20
.XXX ±0.10
UNIT mm

NO.	REV.	REVISIONS	CHK	DATE
2	A2	Modify Data	HZF	07/10/2012
1	A1	Modify Data	HZF	02/22/2010
0	A0	NEW RELEASE	HZF	